BMW Motorrad

Installation instructions

Sports silencer

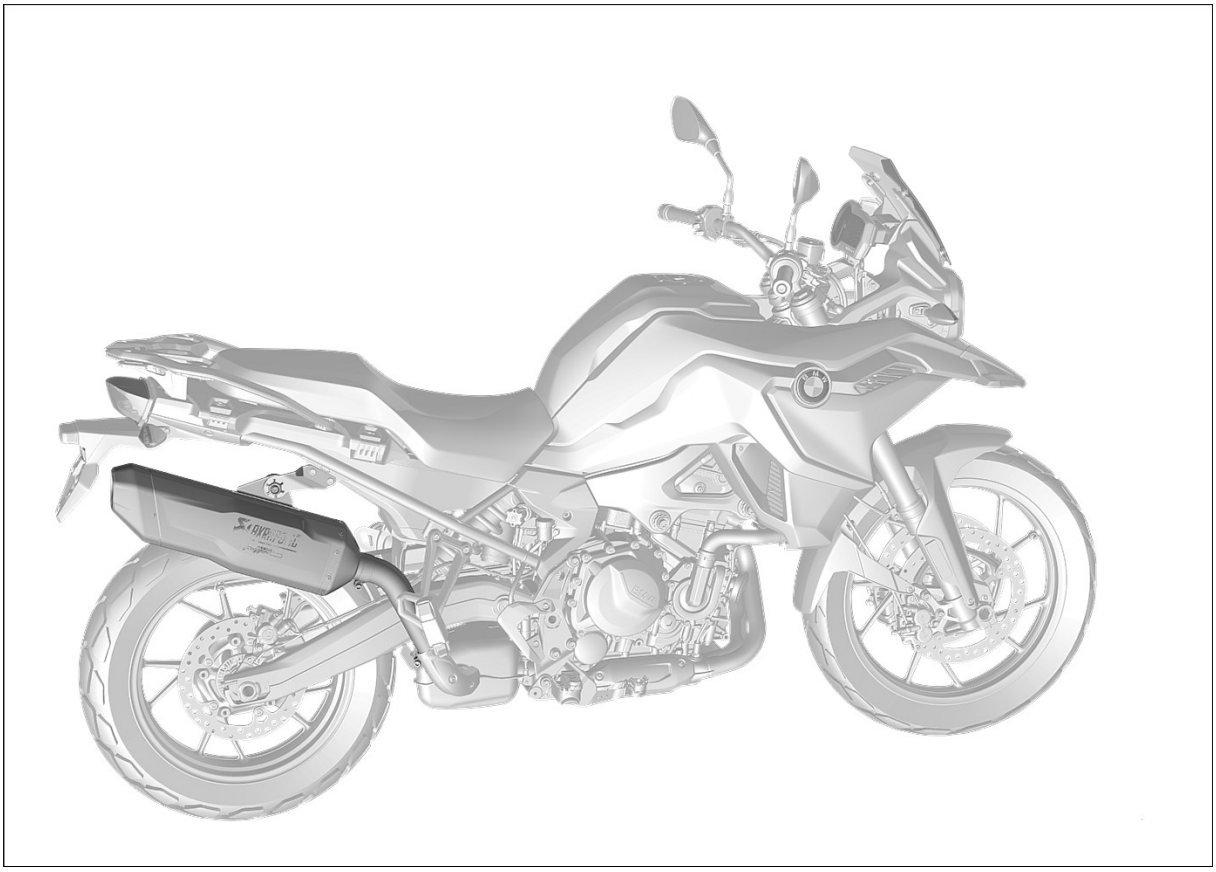

Order No. 77 01 5 A34 731 BMW Motorrad 08/2020

Before commencing work, you must read these installation instructions through carefully and make sure you understand them fully.

We congratulate you on your choice of optional accessories from BMW Motorrad that will enable you to customise your motorcycle in accordance with your personal preferences.

Safety is invariably an essential prerequisite for extracting full benefit and enjoyment from new accessories. Some work calls for special tools and possibly a thorough knowledge of motorcycle technology. If you are in doubt consult a specialist workshop, preferably your authorised BMW Motorrad dealer.

Since we provide you with a multitude of accessories and optional equipment, we cannot cover all equipment specifications in these installation instructions. Therefore we restrict ourselves to the basic version of the corresponding model. The removal and installation of other possibly installed accessories is described in the corresponding installation instructions. Consult your authorised BMW Motorrad dealer if you no longer have access to the sets of instructions you need.

If you have questions concerning your motorcycle or any of the accessories from our range, your authorised BMW Motorrad dealer will gladly provide advice and assistance.

We at BMW Motorrad hope you will enjoy riding your BMW and that all your journeys will be pleasant and safe.

The symbols used to draw attention to precautionary statements in this manual are as follows:

⚠ CAUTION

Low-risk hazard. Non-avoidance can lead to slight or moderate injury.

⚠ WARNING

Medium-risk hazard. Non-avoidance can lead to fatal or severe injury.

⚠ DANGER

High-risk hazard. Non-avoidance leads to fatal or severe injury.

ATTENTION

Special notes and precautionary measures. Non-compliance can lead to damage to the vehicle or accessory and, consequently, to voiding of the warranty.

NOTICE

Specific instructions on how to operate, control, adjust or look after items of equipment on the motorcycle.

Tightening torque

Screws, bolts and nuts are tightened in accordance with the applicable DIN/ISO standards. Tightening torques that deviate from the standards are stated. Non-compliance can result in damage to the vehicle or accessories or can endanger the driver.

- ▶ Start of the main activity
- ▷ Start of the secondary activity
- • Instruction
- ◀ End of the main activity
- ◁ End of the secondary activity
- ◇ End of validity designation CS (construction status), OE (optional extra) or OA (optional accessory)

© 2020 Bayerische Motoren Werke Aktiengesellschaft
80788 Munich, Germany
Not to be reproduced by any means whatsoever, wholly or in part, without the written permission of BMW Motorrad, After Sales.
Printed in Germany.
Subject to change without notice. Errors and omissions excepted.
All rights reserved.

Sports silencer

Requisite tools

- Set of Torx bits
- Torque wrench

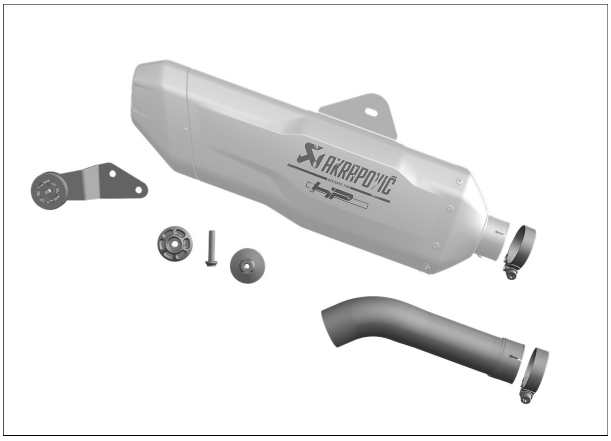

Delivery specification

- Sports silencer
- Retaining plate
- Clamping collar
- Clamping collar, large
- Fillister head screw M5 x 12
- Washer 2 pieces
- Shouldered bushing
- Connecting pipe

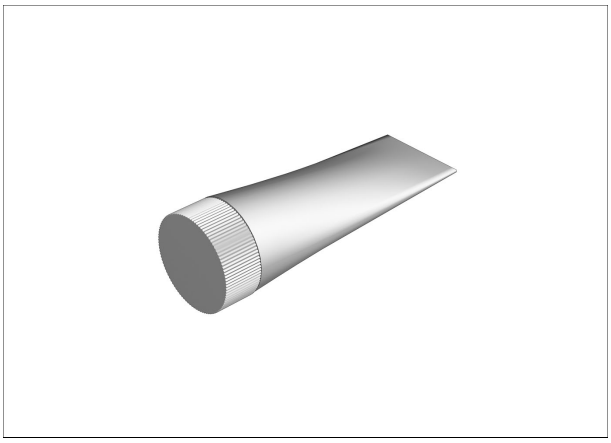

Also required:

- Tube of copper paste

General instructions

⚠ CAUTION

Hot engine and/or hot exhaust system
Risk of burn injury
• Allow engine and exhaust system to cool before starting work.

ATTENTION

Vehicle not securely propped
Risk of damage to parts if vehicle topples
• Prop the vehicle securely.

⚠ WARNING

Children and pets in the working area
Injury to persons
• Keep children and pets away from the working area.

⚠ CAUTION

Wearing jewellery during work

Risk of injury by snagging or electrical short circuit

- Remove all items of personal jewellery (rings, chains, wristwatch, etc.) before starting work.

NOTICE

Once the retrofit kit has been installed by the workshop, these installation instructions must be handed over to the customer.

Make sure that these installation instructions accompany the retrofit kit when it is passed on to a third party.

77 11 010 Installing sports silencer

– without centre stand[OE] (0636)

Additional work: 46 52 510 Removing and installing the rear-wheel stand special tool (motorcycles without centre stand)◇

1

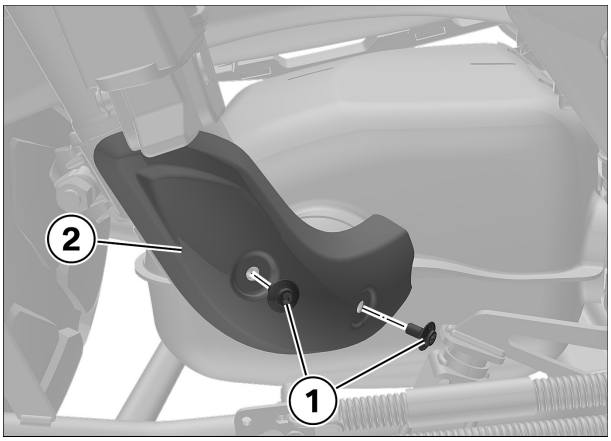

▶ Removing silencer cover

- Remove screws **(1)**.
- Remove silencer cover **(2)**.

◀

2

▶ Removing silencer

⚠ CAUTION

Hot exhaust system
Risk of burn injury
- Do not touch a hot exhaust system.

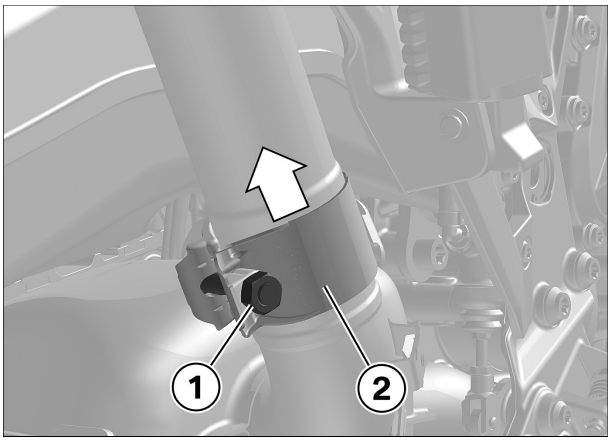

- Slacken nut **(1)** on the clamp **(2)**.
- Slide clamp **(2)** upwards.

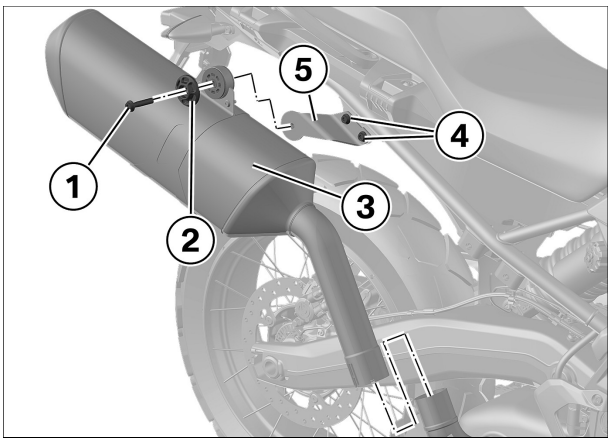

- Remove bolt **(1)** with shaped washer **(2)**.
- Remove silencer **(3)**.
- Remove bolts **(4)** with holder **(5)**.

◀

3

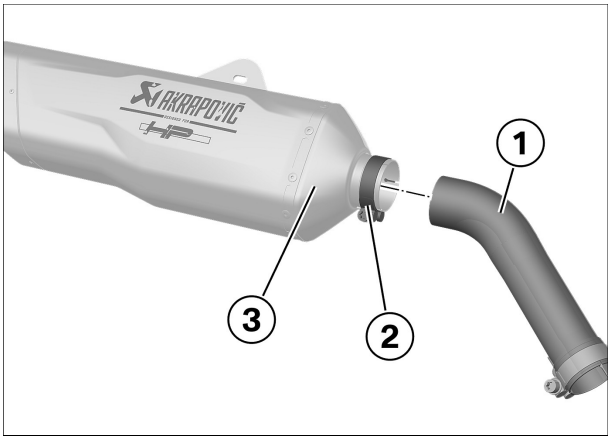

▶ Assemble sports silencer

- Lubricate the sports silencer on the inner diameter before connecting the connecting pipe.

Lubricant	
Copper paste	81 22 9 400 794

- Connect connecting pipe **(1)** in sports silencer **(3)**.
- Tighten the clamp **(2)**.

Tightening torques		
Silencer to front silencer		
M8	19 Nm	

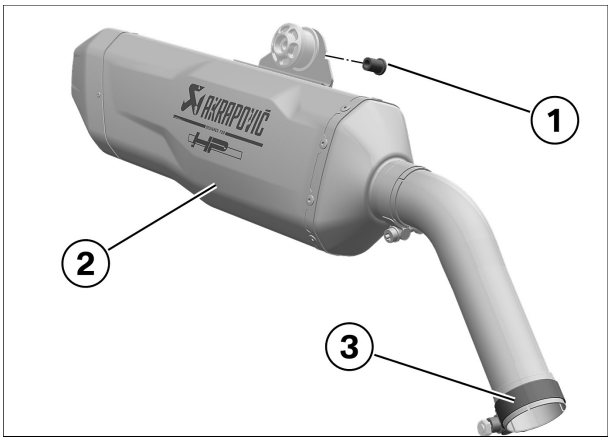

- Install shouldered bushing **(1)** in sports silencer **(2)**.
- Slacken retaining clip **(3)** for installation.

◀

4

▶ Installing sports silencer

ATTENTION

Use of unsuitable cleaning agents
Damage to the surface

- Clean the outer skin of the sports silencer only with a care spray recommended by an authorised BMW Motorrad dealer and a soft, dry cloth.

NOTICE

The lifespan of the insulating material in the silencer depends on engine performance and style of riding.
Consult an authorised BMW Motorrad dealer if the silencer becomes louder or if its external appearance changes.
Note, however, that slight discolouration of the silencer is normal. This discolouration is caused by the high temperature of the exhaust gas.

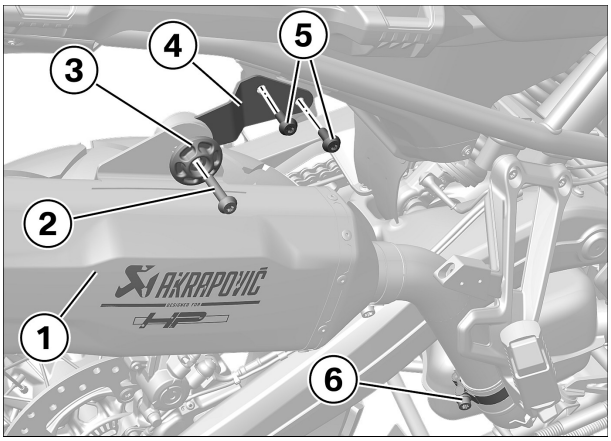

- Lubricate the sports silencer on the inner diameter before connecting it.

Lubricant	
Copper paste	81 22 9 400 794

- Install holder **(4)** with bolts **(5)**.

Tightening torques		
Sports silencer to rear frame		
M8 x 40	19 Nm	

- Connect sports silencer **(1)** to exhaust manifold.
- Hold washer **(3)** in position and install bolt **(2)** until hand-tight.
- Tighten retaining clip **(6)**

Tightening torques		
Silencer to front silencer		
M8	19 Nm	

- Tighten the screw **(2)**.

Tightening torques		
Sports silencer to rear frame		
M8 x 40	19 Nm	

◀

5

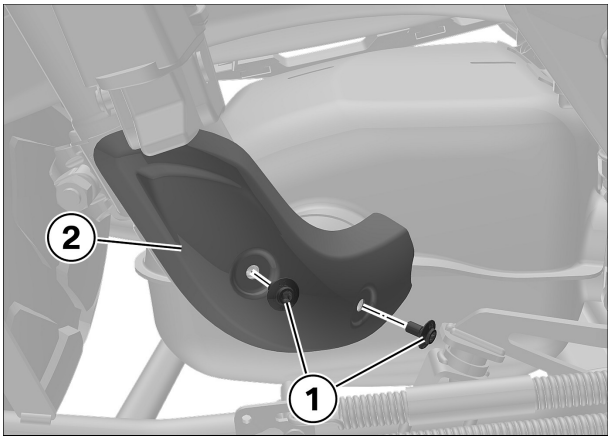

▶ Install the silencer cover

- Install silencer cover **(2)**.
- Install screws **(1)**.

◀

6

▶ Final check of work performed

- Check the following:
  - The work as performed achieved the intended purpose.
  - All reservoirs and containers have been filled and all fluids and lubricants are at their correct levels.
  - All threaded fasteners released beforehand have been correctly retightened.
  - The fuel system is free of leaks.
  - The lights and signalling equipment are fully operational and the vehicle is roadworthy.
  - The brake pads of the front and rear brakes are bedded against the brake discs.

▷ Function test, engine start suppression

Check

- Set kill switch to centred position.
- Select neutral.
- Switch on the ignition.

» Neutral indicator light "N" lights up.

- Select a gear.

» Neutral indicator light "N" goes out.

- Operate the starter switch.

» Starter does **not** operate.

- Extend the side stand.
- Pull the clutch lever.
- Operate the starter switch.

» Starter does **not** operate.

- Retract the side stand.
- Operate the starter switch without releasing the clutch lever.

» Starter operates.

Result

Not all test steps completed successfully.

Measure

- Check the appropriate parts with the BMW Motorrad diagnostic system.

◁
◀